D | C | B | A

康霸子 KANGBAZ

RoHS

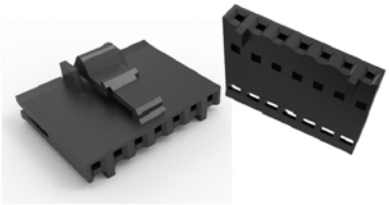

- FOR KB4606P SERIES CONNECTOR
- SPECIFICATIONS

  VOLTAGE RATING：250 VAC RMS.

  CURRENT RATING：2A.

  INSULATION RESISTANCE：1000 MΩ MIN.

  ENVIRONMENTAL

  TEMPERATURE RANGE：-25°C~+85°C.
- DIMENSION: N=CIRCUIT NO.

  A=2.54*N

  B=2.54*(N-1)
- PART NO

KB4606HLC - XXNH

SERIES NO.

NO LOGO.

MOLD NO.

CIRCUITS NUMBER 02 TO 26

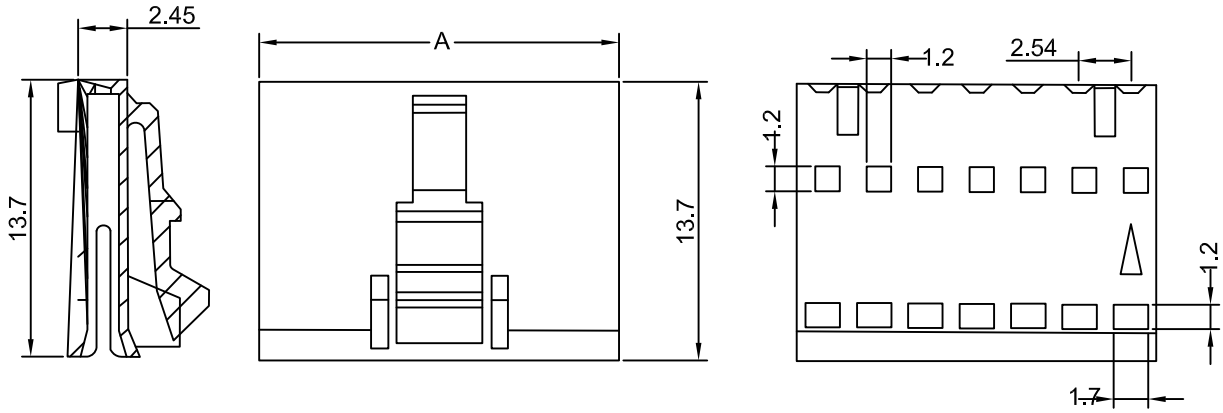

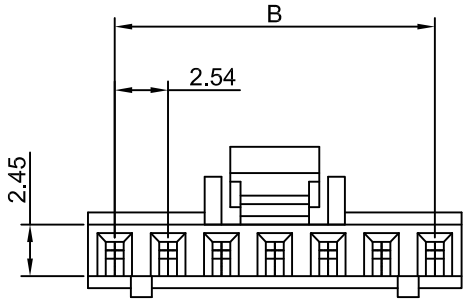

TOLERANCE RANGE/公差範圍	RAWN/繪圖	DATE/日期 2019.07.09	康霸子 KANGBAZ	2.54mm PITCH FFC/FPC CONNECTOR		
	CHECK BY/審查	DATE/日期 2019.07.09				
STANDARD／一般公差 ±0.2	APPROVED BY/核准	DATE/日期 2019.07.09	PART NO./料號 KB4606HLC-XXNH			UNIT/單位 MM
	PACKAGE/包裝	02-06 PIN 1,000 PCS/BAG 07-26 PIN 500 PCS/BAG	MATERIAL/材質 PA66	ANGLE OF VIEW/視角	PIN NUMBER/針數 2-26	REV/版本 A