D | C | B | A

康霸子 KANGBAZ

RoHS

- FOR KB4603 SERIES CONNECTOR
- PLATING:(GOLD PLATING SHOULD NOT LESS THAN FROM TOP OF PIN TO 3mm AREA.AS ILLUSTRATION STATED

  CONTACT AREA:2mm GOLD PLATING

  RADIUS NOT SPECIFIED R=0.15mm MAX

  WIRE RANGE AWG:24-28
- PART NO.

KB4603 - 30K - HG - MH

SERIES NO.

30K/REEL

HG: SELECTIVE GOLD PLATED
OTHER PLATINGS ON REQUEST

MALE

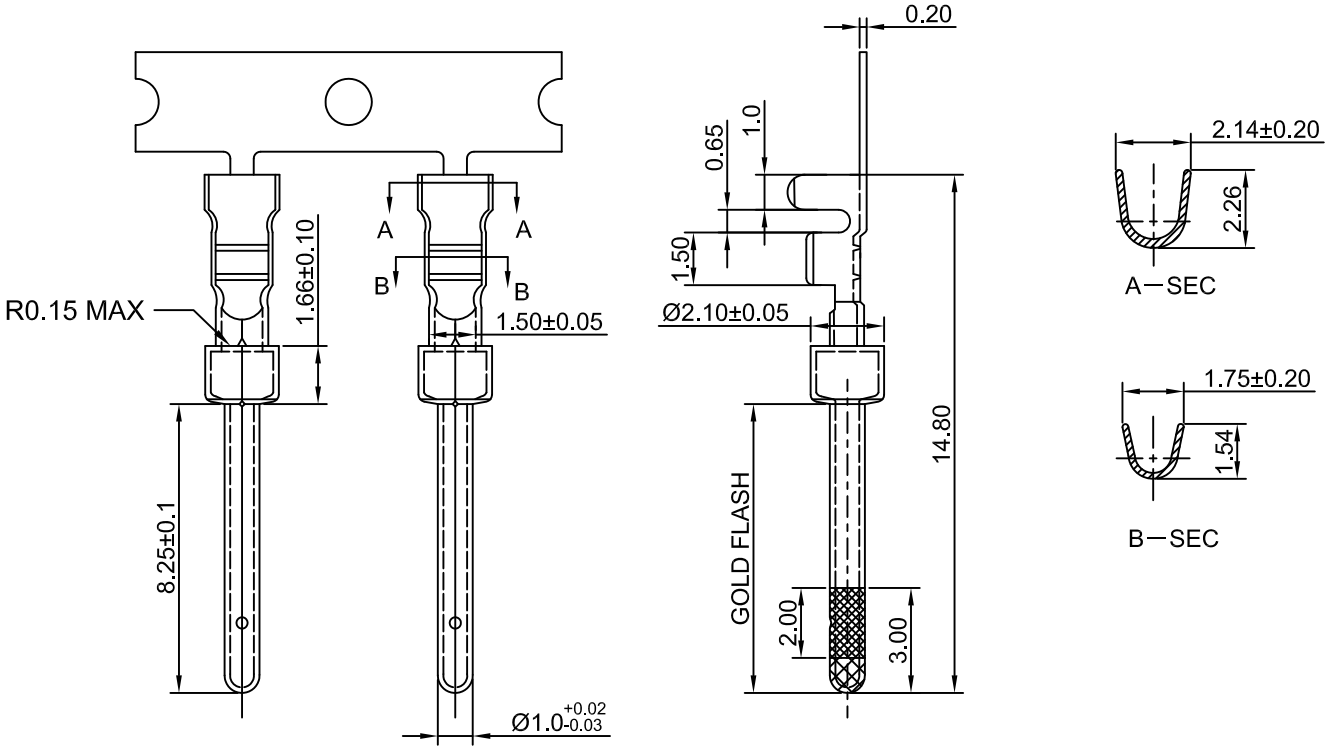

TOLERANCE RANGE/公差範圍	RAWN/繪圖	DATE/日期 2020.05.16	康霸子 KANGBAZ	CONNECTOR FOR CABLE		
	CHECK BY/審查	DATE/日期 2020.05.16				
STANDARD/一般公差 ±0.2	APPROVED BY/核准	DATE/日期 2020.05.16	PART NO./料號 KB4603-30K-HG-MH			UNIT/單位 MM
	PACKAGE/包裝	30,000 PCS / REEL	MATERIAL/材質 BRASS	ANGLE OF VIEW/視角	SHEET/頁碼 1 OF 1	REV/版本 A